Modular PCB terminal block; 1 solder pin/pole; rear; 1-pole; pin spacing 5/5.08 mm / 0.2 in

Item No.: 236-101

Modular PCB terminal block; 1 solder pin/pole; rear; 1-pole; pin spacing 5/5.08 mm / 0.2 in

Marking

RoHS ✓
Compliant

Business data

Supplier	*WAGO*
Item no.	*236-101*
GTIN / EAN	*4044918765886*
Content	*1*
Order amount	*100*
Customer item number	

Notes

Item description:Modular terminal blocks with CAGE CLAMP® connection, screwdriver actuation parallel or perpendicular to conductor entryAlso available with Ex e approvalFor custom terminal strip assembliesOperating tools for factory wiring45° connection angle permits a wide range of uses and wiring optionsSet to metric or inch pin spacing by compressing terminal strips together or pulling them apart

Technical data

Miscellaneous	
No. of poles	*1*
Pin spacing	*5/5.08 mm / 0.197/0.2 in*
Total number of connection points	*1*
Total number of potentials	*1*
Color	*gray*
Ratings according to 1	*IEC/EN 60664-1*

Technical data	
Rated voltage (III / 3) [V]	*250 [V]*
Rated surge voltage (III / 3) [kV]	*4 [kV]*
Rated voltage (III / 2) [V]	*320 [V]*
Rated surge voltage (III / 2) [kV]	*4 [kV]*
Rated voltage (II / 2) [V]	*630 [V]*
Rated surge voltage (II / 2) [kV]	*4 [kV]*
Nominal current [A]	*24 [A]*
Number of individual connection objects at the product	*1*
Number of levels	*1*
Connection technology	*CAGE CLAMP®*
Number of connection points	*1*
Actuation type	*Betätigungswerkzeug*
Solid sizes	*0.08 … 2.5 mm² / 28 … 12 AWG*
Fine-stranded wires	*0.08 … 2.5 mm² / 28 … 12 AWG*
Fine-stranded wires with insulated ferrule	*0.25 … 1.5 mm² / …*
Fine-stranded wires with uninsulated ferrule	*0.25 … 1.5 mm² / …*
Strip length	*5 … 6 mm / 0.2 … 0.24 in*
Conductor entry angle to the PCB [°]	*45 [°]*
Strip length (1) [in]	*0.22 [in]*
Solder pin arrangement	*in line*
Solder pin length [mm]	*4 [mm]*
Drilled hole diameter (tolerance) [mm]	*1.1(+ 0.1) [mm]*
Material group	*I*
Insulating material	*Polyamide 66 (PA 66)*
Flammability rating per UL 94	*V0*
Limit temperature range	*-60 … 105 C*
Clamping spring material	*Chrome-nickel spring steel (CrNi)*
Contact material	*Electrolytic copper (Ecu)*
Contact plating	*tin-plated*
Fire load [MJ]	*0.012 [MJ]*
Weight [g]	*0.848 [g]*
Width	*7.2 mm / 0.283 in*
Height	*17 mm / 0.669 in*
Height from the surface	*13 mm / 0.512 in*

Technical data	
Length	*14 mm / 0.551 in*

Images & drawings

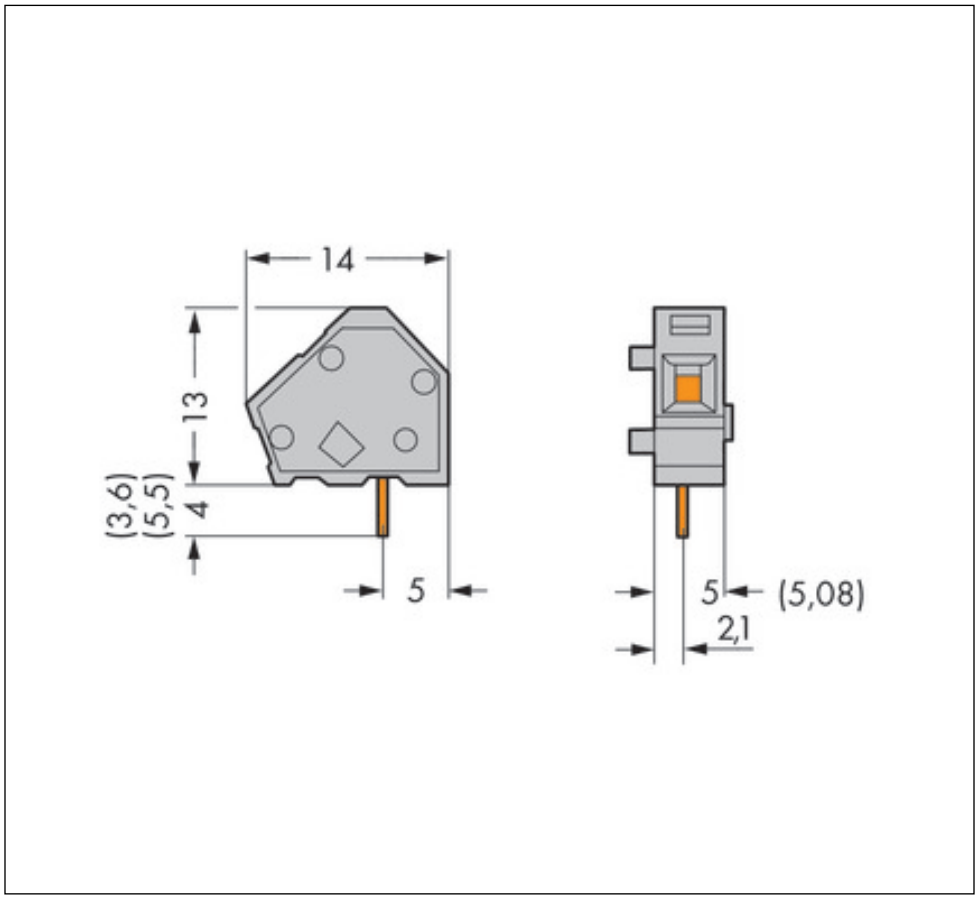

Address

WAGO Kontakttechnik GmbH & Co. KG
Hansastr. 27
32423 Minden
Telefon: 0571/887-0
Fax: 0571/887-169
http://www.wago.com
© WAGO Kontakttechnik GmbH & Co. KG
Technische Änderungen und Irrtümer vorbehalten.