COMPACT splicing connectors for all wire types; 3-conductor terminal block; with operating levers; Max. operatung temperature 85°C

Item No.: 221-413

COMPACT splicing connectors for all wire types; 3-conductor terminal block; with operating levers; Max. operatung temperature 85°C

Marking

RoHS ✓
Compliant

Business data

Supplier	*WAGO*
Item no.	*221-413*
GTIN / EAN	*4050821808442*
Content	*1*
Order amount	*50*
Customer item number	

Notes

Technical data

Miscellaneous

Total number of connection points	*3*
Total number of potentials	*1*
Color	*transparent*
Ratings according to 1	*EN 60664*
Rated voltage (II / 2) [V]	*450 [V]*
Rated surge voltage (II / 2) [kV]	*4 [kV]*
Nominal current [A]	*32 [A]*
Connection technology	*CAGE CLAMP®*

Technical data	
Number of connection points	*3*
Actuation type	*Push-in*
Connectable conductor materials	*Kupfer*
Nominal cross section	*4 mm²*
Solid sizes	*0.2 … 4 mm² / 24 … 12 AWG*
stranded, connectable	*0.2 … 4 mm² / 24 … 12 AWG*
Fine-stranded wires	*0.14 … 4 mm² / 24 … 12 AWG*
Strip length	*11 mm / 0.43 in*
Type of wiring	*Side-entry wiring*
Flammability rating per UL 94	*V2*
Weight [g]	*2.527 [g]*
Width	*18.7 mm / 0.736 in*
Height	*8.3 mm / 0.327 in*
Length	*18.6 mm / 0.732 in*
Safety information 1	*In grounded power lines*

Images & drawings

WAGO
221
AWG 24-12
600V
32A
0,2-4
05

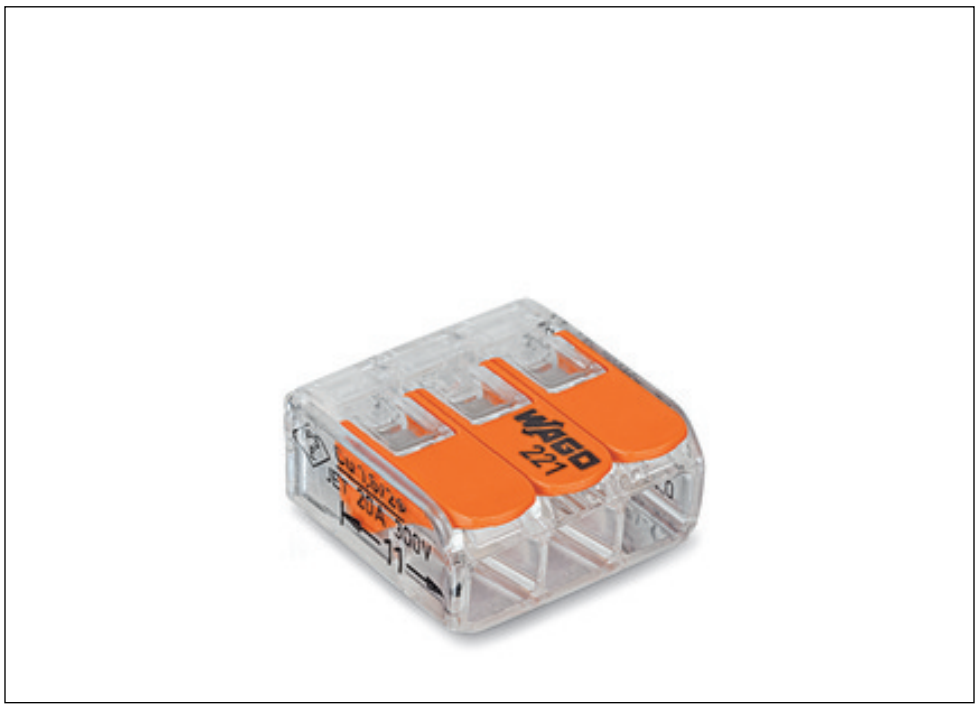
WAGO
221

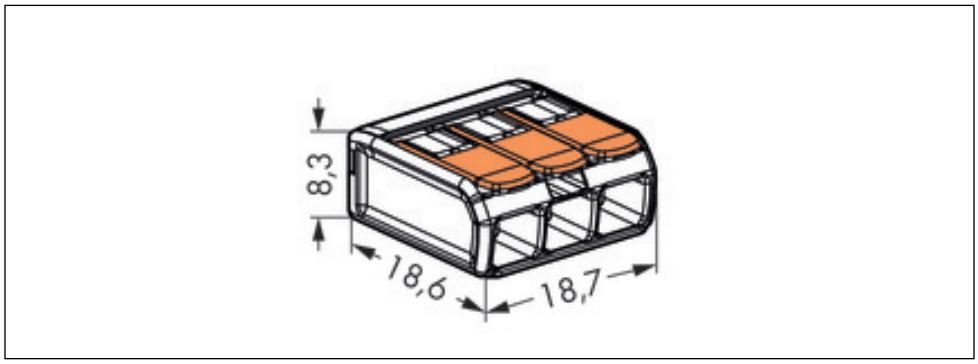

Address

WAGO Kontakttechnik GmbH & Co. KG
Hansastr. 27
32423 Minden
Telefon: 0571/887-0
Fax: 0571/887-169
http://www.wago.com
© WAGO Kontakttechnik GmbH & Co. KG
Technische Änderungen und Irrtümer vorbehalten.