Modular PCB terminal block; 2 solder pins/pole; 1-pole; pin spacing 5/5.08 mm / 0.2 in; with push-button

Item No.: 256-401

Modular PCB terminal block; 2 solder pins/pole; 1-pole; pin spacing 5/5.08 mm / 0.2 in; with push-button

Marking

RoHS ✓
Compliant

Business data

Supplier	*WAGO*
Item no.	*256-401*
GTIN / EAN	*4044918755825*
Content	*1*
Order amount	*100*
Customer item number	

Notes

Item description:Modular terminal blocks with push-button actuated CAGE CLAMP®Also available with Ex e approvalSet to metric or inch pin spacing by compressing terminal strips together or pulling them apartIdeal for in-the -field wiring thanks to simplified push-button actuationConvenient, tool-free operation

Technical data

Miscellaneous	
No. of poles	*1*
Pin spacing	*5/5.08 mm / 0.197/0.2 in*
Total number of connection points	*1*
Total number of potentials	*1*
Color	*gray*
Ratings according to 1	*IEC/EN 60664-1*
Rated voltage (III / 3) [V]	*250 [V]*

Technical data	
Rated surge voltage (III / 3) [kV]	*4 [kV]*
Rated voltage (III / 2) [V]	*320 [V]*
Rated surge voltage (III / 2) [kV]	*4 [kV]*
Rated voltage (II / 2) [V]	*630 [V]*
Rated surge voltage (II / 2) [kV]	*4 [kV]*
Nominal current [A]	*24 [A]*
Number of individual connection objects at the product	*1*
Number of levels	*1*
Connection technology	*CAGE CLAMP®*
Number of connection points	*1*
Actuation type	*Betätigungsdrücker*
Solid sizes	*0.08 … 2.5 mm² / 28 … 12 AWG*
Fine-stranded wires	*0.08 … 2.5 mm² / 28 … 12 AWG*
Fine-stranded wires with insulated ferrule	*0.25 … 1.5 mm² / …*
Fine-stranded wires with uninsulated ferrule	*0.25 … 1.5 mm² / …*
Strip length	*5 … 6 mm / 0.2 … 0.24 in*
Conductor entry angle to the PCB [°]	*45 [°]*
Strip length (1) [in]	*0.22 [in]*
Solder pin arrangement	*in line*
Solder pin length [mm]	*4 [mm]*
Drilled hole diameter (tolerance) [mm]	*1.1(+ 0.1) [mm]*
Material group	*I*
Insulating material	*Polyamide 66 (PA 66)*
Flammability rating per UL 94	*V0*
Limit temperature range	*-60 … 105 C*
Clamping spring material	*Chrome-nickel spring steel (CrNi)*
Contact material	*Electrolytic copper (Ecu)*
Contact plating	*tin-plated*
Fire load [MJ]	*0.014 [MJ]*
Weight [g]	*0.952 [g]*
Width	*7.8 mm / 0.307 in*
Height	*22.2 mm / 0.874 in*
Height from the surface	*18.2 mm / 0.717 in*
Length	*17.6 mm / 0.693 in*

Images & drawings

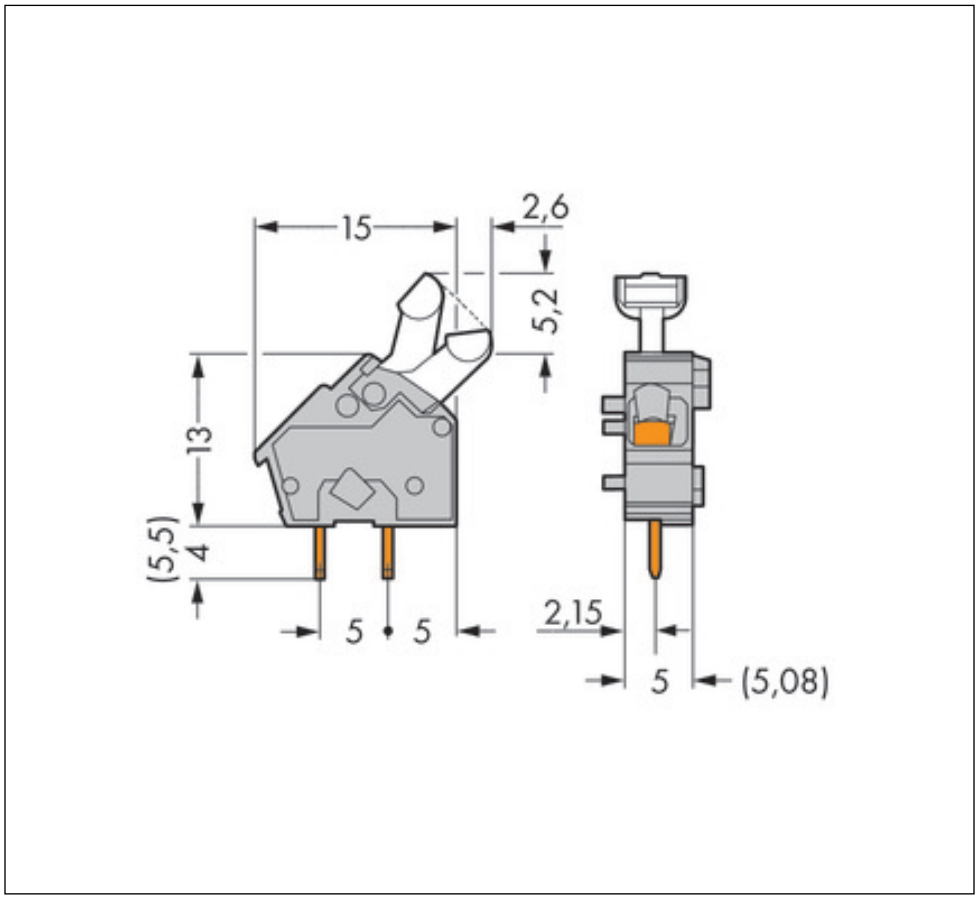

Address

WAGO Kontakttechnik GmbH & Co. KG
Hansastr. 27
32423 Minden
Telefon: 0571/887-0
Fax: 0571/887-169
http://www.wago.com
© WAGO Kontakttechnik GmbH & Co. KG
Technische Änderungen und Irrtümer vorbehalten.