Specification

Client Name: _____

Client P/N: _____

Wenrun P/N: **LAG30240**

Date: _____

Customer confirm	Approved by	Checked by	Issued by

◆ Features:

- High speed response.
- High reliability and long life.
- Low power consumption.
- Available in red,blue,white ,green, yellow colors.
- Suitable for pulse operation.
- This product doesn't contain restriction Substance, comply ROHS standard.

◆ Descriptions:

- The LED lamps are available with different colors, intensities, epoxy colors, etc.
- The series specially designed for applications requiring higher brightness.
- Superior performance in outdoor environment.

◆ Applications:

- These lamp are widely used for various application.
- Board for display.
- Indication of all kinds.

◆ Selection Guide:

Part No.	Chip		Lens Type
	Material	Emitting Color	
LAG30240	AlGaInP	High Super Green	Green Diffused

◆ Package Dimensions:

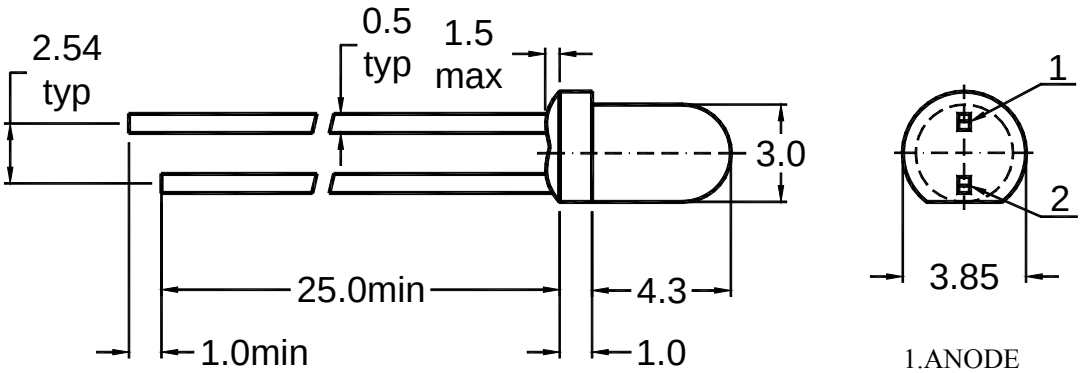

1.ANODE
2.CATHODE

NOTES:

1、All dimensions are in millimetres (mm).

2、Tolerance is ±0.25mm(0.01") unless otherwise noted.

◆ Absolute Maximum Rating （Ta=25℃）

Parameter	Symbol	High Super Green	Unit
Power Dissipation	P_d	60	mW
Pulse Forward Current	I_{FP}	80	mA
DC Forward Current	I_F	20	mA
Reverse Voltage	V_R	6	V
Electrostatic Discharge(HBM)	ESD	2000	V
Operating Temperature Range	Topr	-40 ~ +85	℃
Storage Temperature Range	Tstg	-40 ~ +100	℃
Soldering Temperature	Tsol	260 ± 5	℃

Notes： Soldering time ⩽ 5 seconds.

I_{FP} condition: pulse width ⩽ 1ms ,duty cycle ⩽ 1/10.

Tsol condition : 3mm for the base of the epoxy bulb.

◆ Electrical Optical Characteristics（Ta=25℃）

Parameter	Symbol	High Super Green		Unit	Test Condition
		Typ.	Max.		
Luminous Intensity	I_V	110	--	mcd	I_F=20mA
Forward Voltage	V_F	2.0	--	V	I_F=20mA
Reverse Current	I_R	--	50	uA	V_R=6V
Dominant Wavelength	λd	571	--	nm	I_F=20mA
Peak Emission Wavelength	λ_P	575	--	nm	I_F=20mA
Spectral Line Half Width	Δλ	30	--	nm	I_F=20mA
Recommond forward current	I_F(rec)	20	--	mA	--
Viewing Angle	$2\theta_{1/2}$	30	--	deg	I_F=20mA

Notes: 1.Tolerance of Luminous Intensity ±10%

2.Tolerance of Dominant Wavelength ±2nm

3. Tolerance of Forward voltage ±0.05V

4. Luminous Intensity is measured by WENRUN's equipment on bare chips

◆ Reliability

(1) Test Items and Conditions

NO	Test Item	Test Conditions	Sample	Ac/ Re
1	Temperature Cycle	-40±5℃→25±5℃→100±5℃→25±5℃ (30min，5min，30min，5min) 100 Cycles	20	0/1
2	High Temperature Storage	Ta：100±5℃ Test time=1000HRS(-24HRS,+72HRS)	20	0/1
3	High Temperature And High Humidity Working	Ta：85±5℃，RH:85±5%，IF=20mA Test time=500HRS(-24HRS,+72HRS)	20	0/1
4	Low Temperature Storage	Ta：-40±5℃ Test time=1000HRS(-24HRS,+72HRS)	20	0/1
5	Operating Life Test	Connect with a power IF=20mA Ta=Under room temperature Test time=1000HRS(-24HRS,+72HRS)	20	0/1
6	Solder Resistance	T.Sol=260±5℃ one time Dwell Time=10±1Secs	20	0/1
7	Thermal Shock	-40±5℃→100±5℃ (15min，15min) 100 Cycles	20	0/1

(2)Criteria of judging the damage

Item	Symbol	Test condition	Criteria for judgement	
			Min.	Max.
Forward voltage	VF	IF=20 mA	/	U.S.L*1.1
Reverse current	IR	VR=5V	/	15uA
Luminous intensity	IV	IF=20 mA	L.S.L*0.7	/
Wave length	λ D/ λ P	IF=20 mA	/	U.S.L±2nm
Appearance	/	View check	No mechanical damage	

* U.S.L: Upper standard level L.S.L: Lower standard level

◆ Typical Electro-Optical Characteristics Curves：

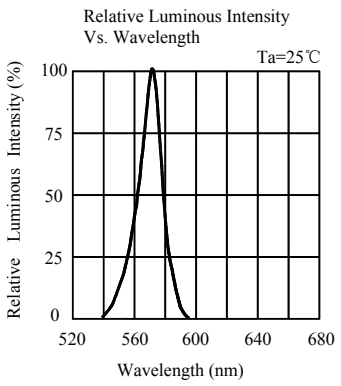

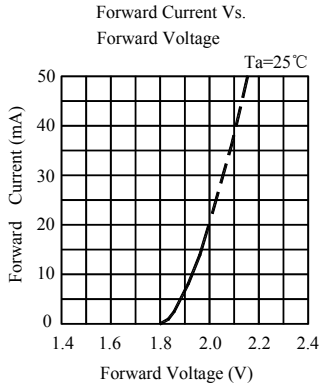

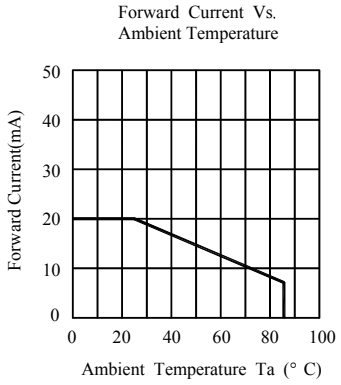

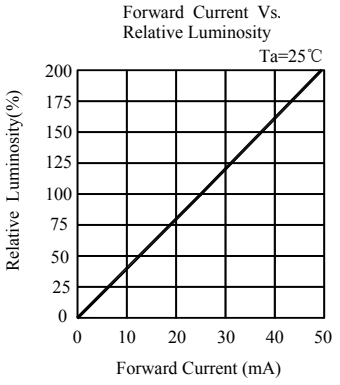

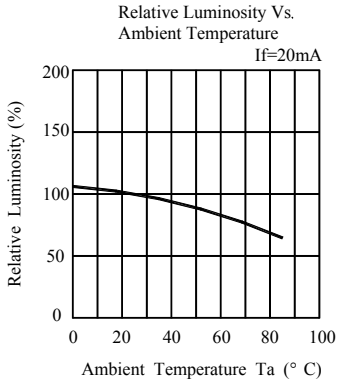

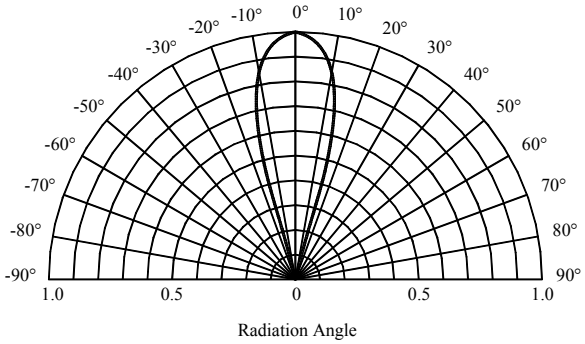

◆ Label Form Specification

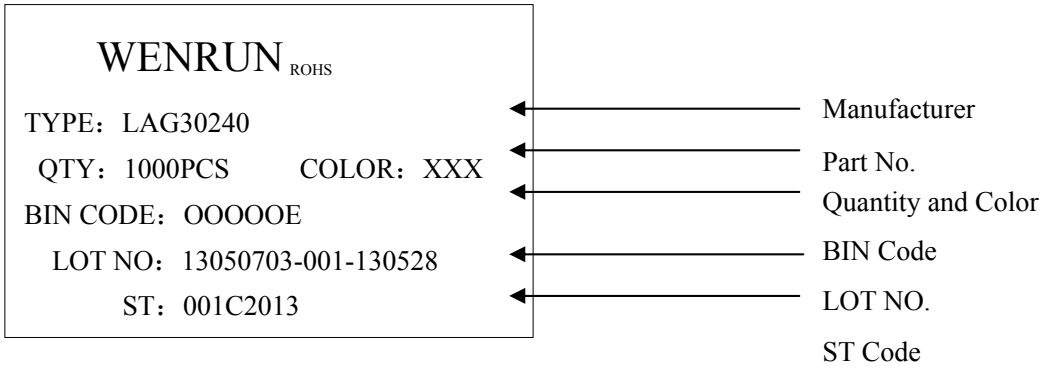

◆ Storage and application notices

1、 Storage

1. Before opening package: the LEDs should be kept at 18-30℃, related humility: 30-70%RH.They should be used out within 3moths;
2. The internal and esterand boxes can not be contacted with ground to prevent absorption of moisture;
3. No acid, alkali, salt, corrosive and explosive gas; away from sunlight and keep the environment clean;

2、 Application

1. Do not use any unknown chemical liquid to clean LED, it will damage the LED resin surface; use the alcohol under the room temperature if necessary but less than 1 min;
2. When forming lead frame, the lead frame should be bent at a point at least 2mm from the base of epoxy. The forming should be done before soldering which can avoid epoxy's broken and internal structure's damage. Forming must be operated by the specific jig or the qualified operator to make sure the lead frame and distance are as same as the circuit board. Specific is shown as below,

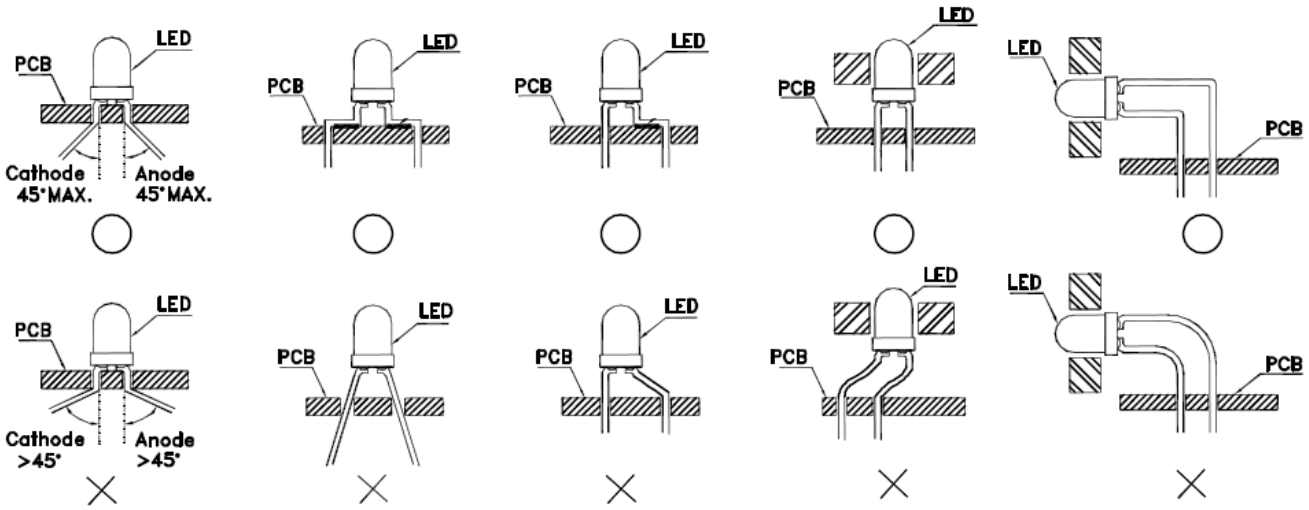

Mark:"○" means correct，"×"means incorrect.

3. Do not apply any bending stress to the base of the LED. The stress to the base may damage the internal connection which causes the electric character's failure.

4.

a. Soldering iron power: under 30W; soldering temperature: 295℃±5℃; soldering time: within 3sec.(only 1time) ;

b. Soldering temperature in solder machine: 250℃±10℃; soldering time: within 5sec.

c. Soldering temperature during wave soldering process: 235℃±10℃, soldering time: within 5sec.

5. The LEDs should be soldered at the coordinated position on the PCB; the distance from soldering point to epoxy resin should be 3mm at least. If the 2nd soldering process required, 3mins must be left to ensure the high temperature status can return to room temperature. But the recommended soldering time is only 1time in principle.

6. If solder LEDs on one PCB by the soldering iron, do not solder the 2 lead frames of one LED at the same time.

7. Note of Electrical matter:

① One-way conduction, LED does not allow the reverse driving;

② LED is a kind of constant current component which can not be lighted by the constant voltage mode; a smaller voltage fluctuation can cause the large current fluctuation which causes the failure of LED;

Each LED should be drove under constant current mode if in a parallel circuit design, otherwise, the colour and brightness will be nonuniform; When the environmental temperature ris ing, the LED junction temperature will rise, internal resistance will decrease, so the current will be increased by the constant voltage power which short the life span;

③ If the brightness of lighting source can meet the requirement, we recommend using the driving current less than the rated current, in order to improve the product's reliability;

8. LED is a kind of electrostatic sensitive devises, anti-static measures have to be processed during storage and operation:

① LED production workshop should lay anti-static floor and ground connection, the work table have to use the anti-static materials and cover a table mater with the surface resistance of 10^6-$10^9\Omega$

② Production machine: REFLOW, SMT equipment, electric iron, test equipment; all the equipments must be well grounded, and the grounding alternating current impedance should be less than 1.0Ω. A fan need to be installed on the equipments and production processes that easy to generate static electricity; the operators must wear anti-static clothing, shoes, wristband, and gloves, etc. in the process;

③ LEDs must be contained in the anti-static box, and all the package material should be the anti-static materials;

9. The details electronic characters can refer to our product specification.

◆ Notes:

1、Above specification may be changed without notice. We will reserve authority on material change for above specification.

2、When using this product, please observe the absolute maximum ratings and the instructions for the specification sheets. We assume no responsibility for any damage resulting from use of the product which does not comply with the instructions included in the specification sheets.